Expert Group LLC
347923, Russia, Rostov region, Taganrog,
Instrumental'naya street 2-31, bld. 5
tel.: +7 (928) 771-58-81
web: www.eesmt.com
e-mail: info@eesmt.com

Technical/commercial offer for

PiPlacer4

RUSSIAN AUTOMATIC SURFACE-MOUNT TECHNOLOGY (SMT) COMPONENT PLACEMENT SYSTEM aka PICK AND PLACE MACHINE

Expert Group LLC
tel.: +7 (928) 771-58-81
web: www.eesmt.com, e-mail: info@eesmt.com

The universal automatic pick and place machine **PiPlacer4** is designed to install various types of SMD components on the PCB surface for pilot projects, small-scale and medium-scale electronics production. It allows you to increase productivity and product quality, while reducing the cost of work and assembly time.

PiPlacer4 was designed and being manufactured in Russia

The **PiPlacer4** was designed and manufactured in Taganrog, Russia. We offer a 1-year warranty period with post warranty support.

- RESOLUTION of the Ministry of Industry and Trade of the Russian Federation confirming the production of industrial products on the territory of the Russian Federation.
- Company card in the list of manufacturers of industrial products in Russian Federation.
- PiPlacer4 is included in the product catalog of the Ministry of Industry and Trade of the Russian Federation.
- PiPlacer4 is manufactured in accordance with the technical conditions ЕТРП.442221.001ТУ.

Expert Group LLC
tel.: +7 (928) 771-58-81
web: www.eesmt.com, e-mail: info@eesmt.com

Four independent mounting nozzles

PiPlacer4 has four independent mounting nozzles, which allows it to perform simultaneous components pick up from feeders. The PiPlacer software will help you determine the optimal position of the feeders to reduce installation time.

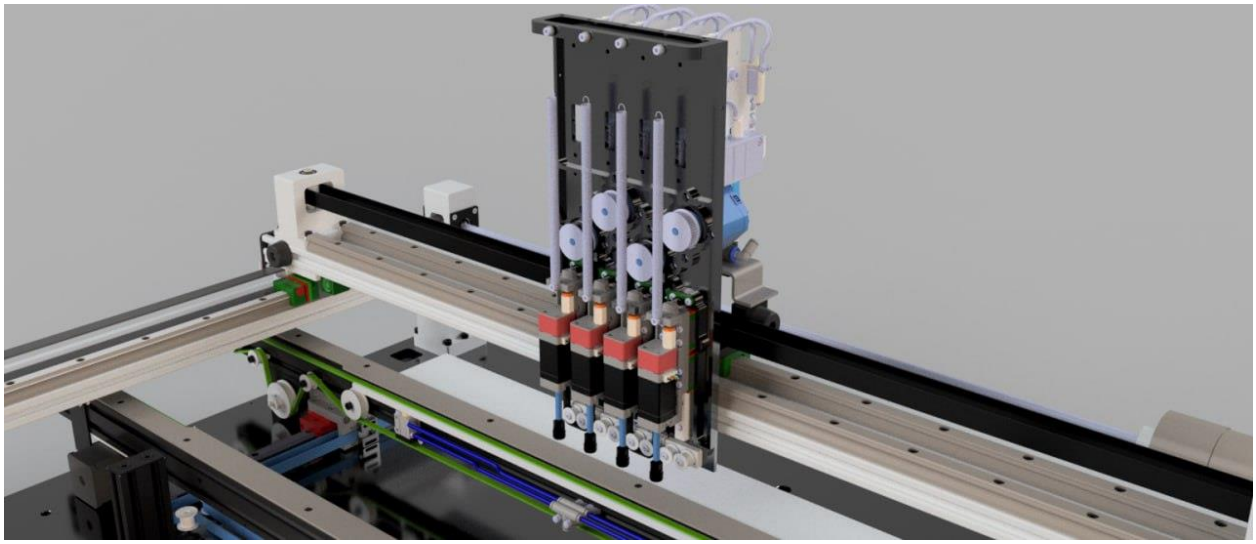

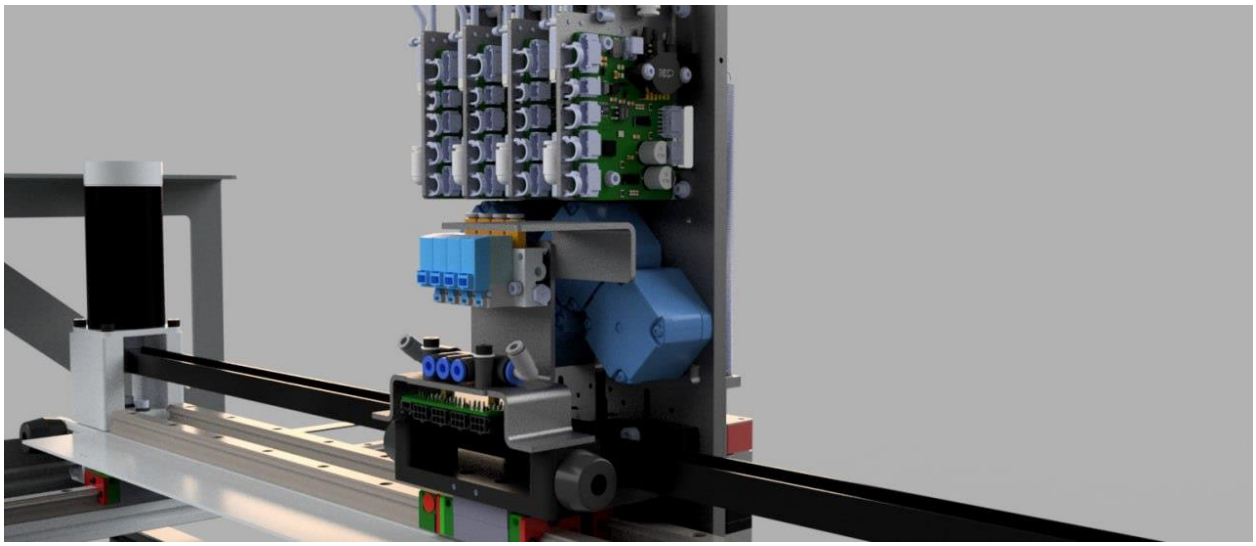

Expert Group LLC
tel.: +7 (928) 771-58-81
web: www.eesmt.com, e-mail: info@eesmt.com

6 cameras with computer vision

4 cameras are used to identify the position of elements in vacuum nozzles.
1 additional camera for larger and very fine pitch components 40x40 mm.
1 camera in the head of **PiPlacer4** to determine the position of vacuum nozzles regarding rapper points on PCB.

Servo drivers for X and Y axes are equipped with c linear encoders

This solution allows compensating for thermal expansion and maintain positioning accuracy throughout the entire working time.

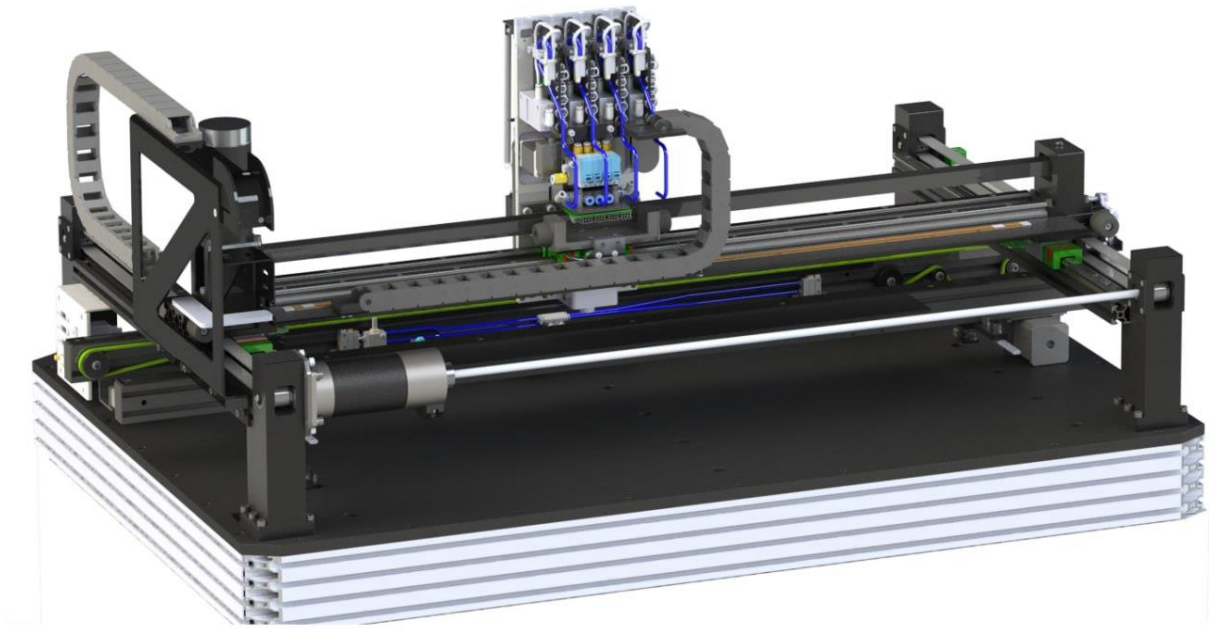

Expert Group LLC
tel.: +7 (928) 771-58-81
web: www.eesmt.com, e-mail: info@eesmt.com

Single zone conveyor

Conveyor allows you to significantly speed up the loading and unloading of a PCB, as well as combine several machines and an oven into one assembly line. The conveyor uses a flat conveyor belt, which is more stable than round belts. The width of the conveyor is changed by means of a motor, according to the value specified in the program.

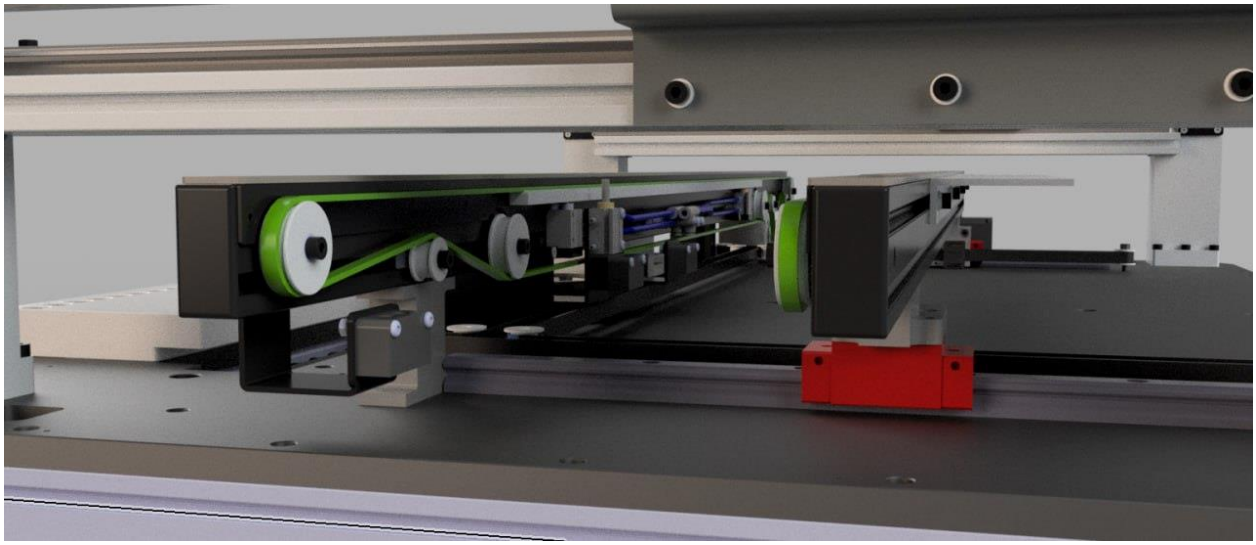

SMEMA interface

With SMEMA interface support, PiPlacer4 can be easily integrated into existing assembly lines with a SMEMA-enabled automatic printer and furnace.

Module for connecting electronic feeders

Electronic feeders have a number of advantages over pneumatic feeders, they work faster, smoother, more accurately and have a universal (switchable) pitch of 2/4 mm. Recommended for installation of 0402 components and mandatory for 0201 components.

Linear guide with lubrication

Linear guides on HIWIN railings are equipped with automatic lubricating cartridges that increase the service life by **more than 100 times**.

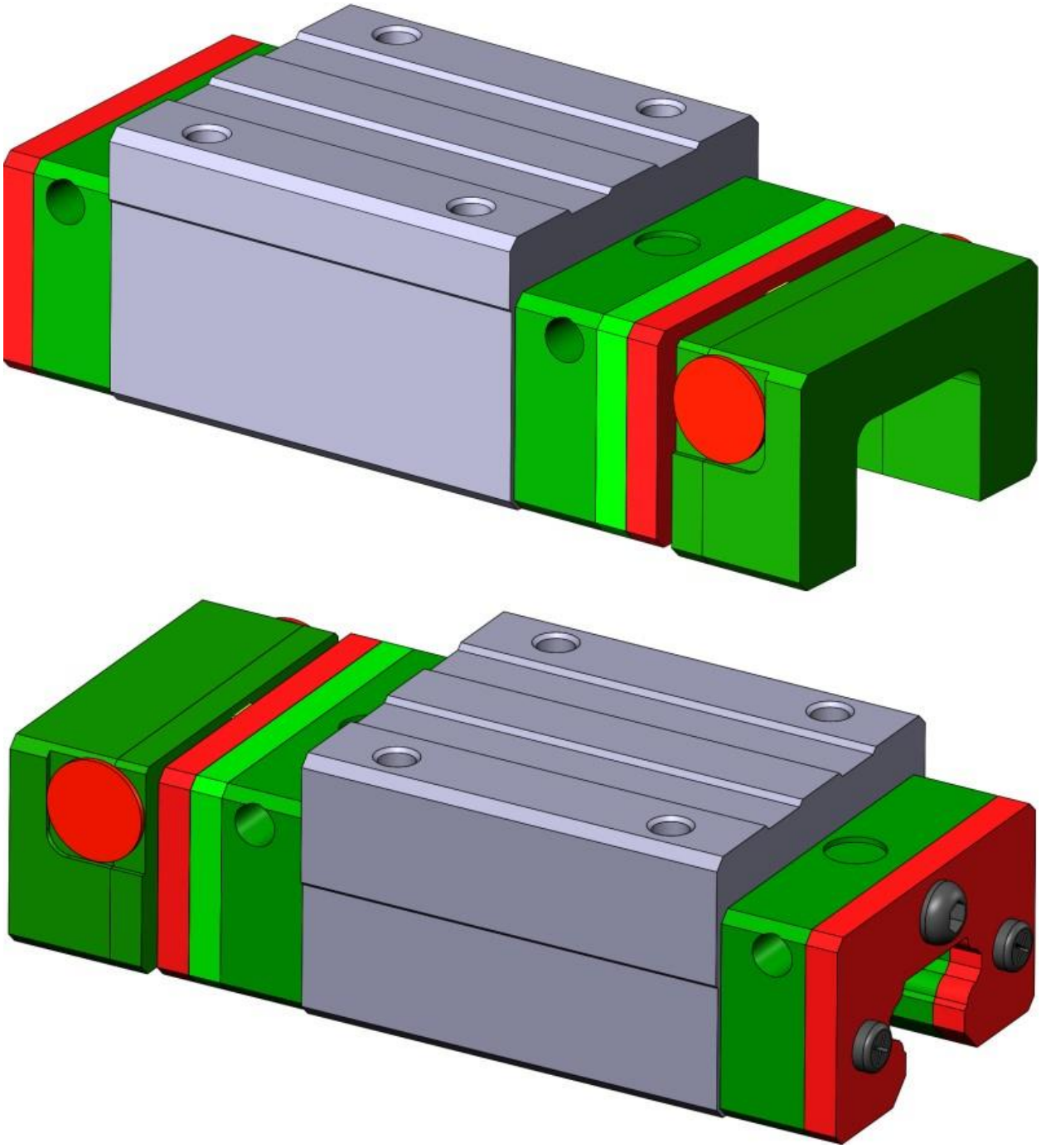

Minimal component size is 0201

PiPlacer4 can work with surface mounting components: 0201 ~ 40x40 mm, max. height: 15mm

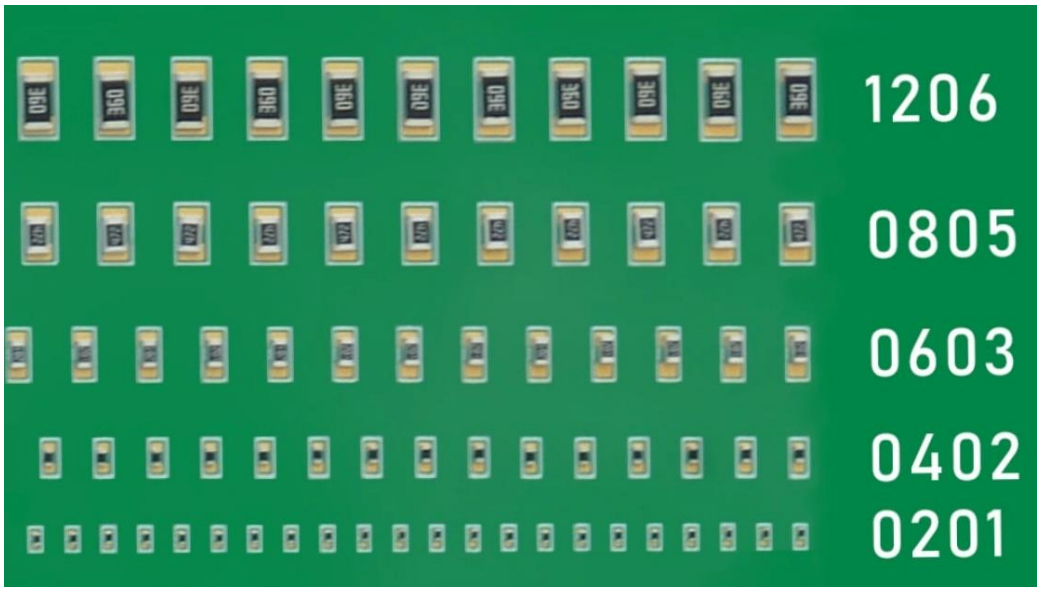

PiPlacer software of our own design

The PiPlacer software has been developed and tested in our own radio equipment manufacturing facility for several years. The design and control interface of PiPlacer was developed taking into account the recommendations of domestic manufacturers. Integration with CAD systems such as Altium Designer, DipTrace, KiCad, P-CAD is supported, and it is also possible to create a program for installing components manually without CAD files (freeform table).

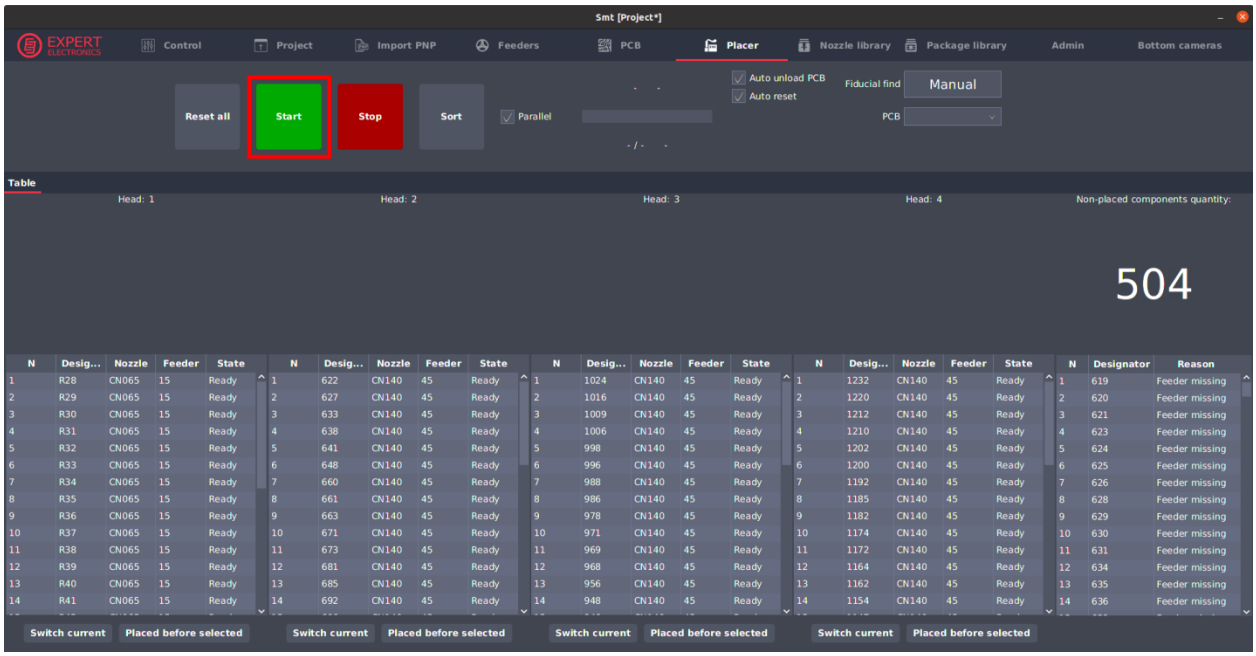

AI error control system

This system was designed to control the following errors:

- operator errors such as incorrectly set component height, incorrectly set PCB level
- incorrectly set size of the component will be recognized with the help of camera
- feeder errors (tape tear, component missing)
- input pressure error
- component pickup error is controlled by vacuum measurement and machine vision
- axis movement errors

Quick start documentation for PiPlacer4

Step-by-step walkthrough will help you to understand the way control software works. It tells about:

- Project creation
- Import of Pick&Place file
- Binding of components cases
- PCB adjustment
- Feeders programming
- Components alignment
- First setup of PCB

Augmented reality technology

Created to help the operator and distinguishes PiPlacer4 from existing analogues, it:
- draws elements on the board to understand the correspondence of the element to the seat;
- draws the elements in the feeder, for a better definition of the element in space;
- helps to write programs for boards without a schematic (pick & place file that defines fiducial points and locations of elements).

High versatility with components

PiPlacer4 is able to work with components:

- in tapes, pieces of tapes
- cases, pallets
- **scattered elements (requires option: feeder for scattered components + SW)**

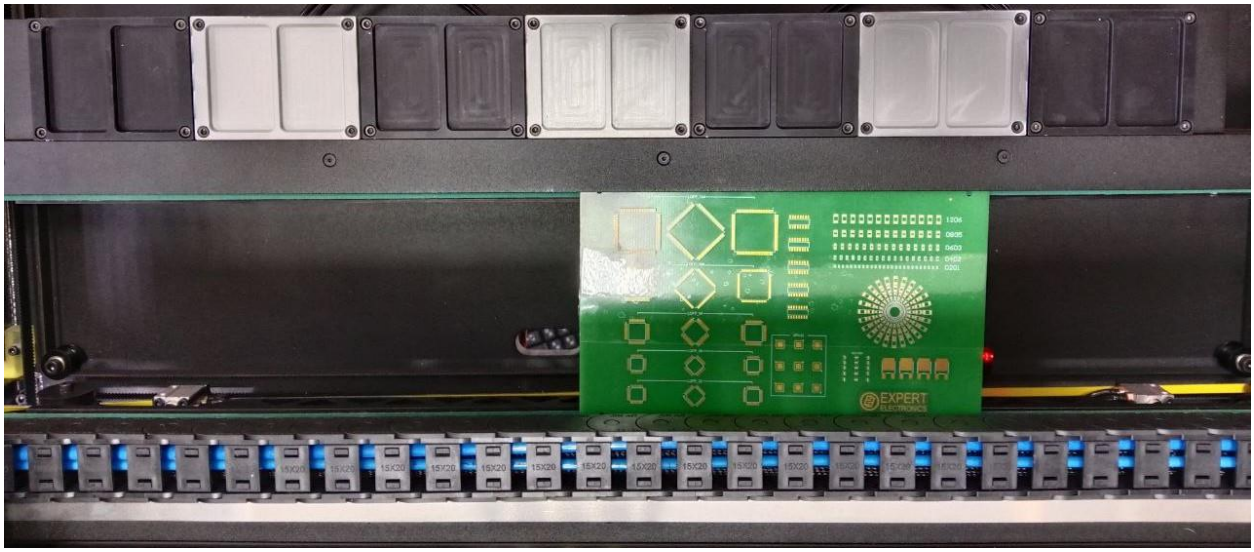

Compactness and mobility

The PiPlacer4 machine is equipped with wheels for free movement around the production area and easily passes through standard doorways, its width is 750 mm. After you determined the location of the installer's operation, a special support is unscrewed from the swivel rollers.

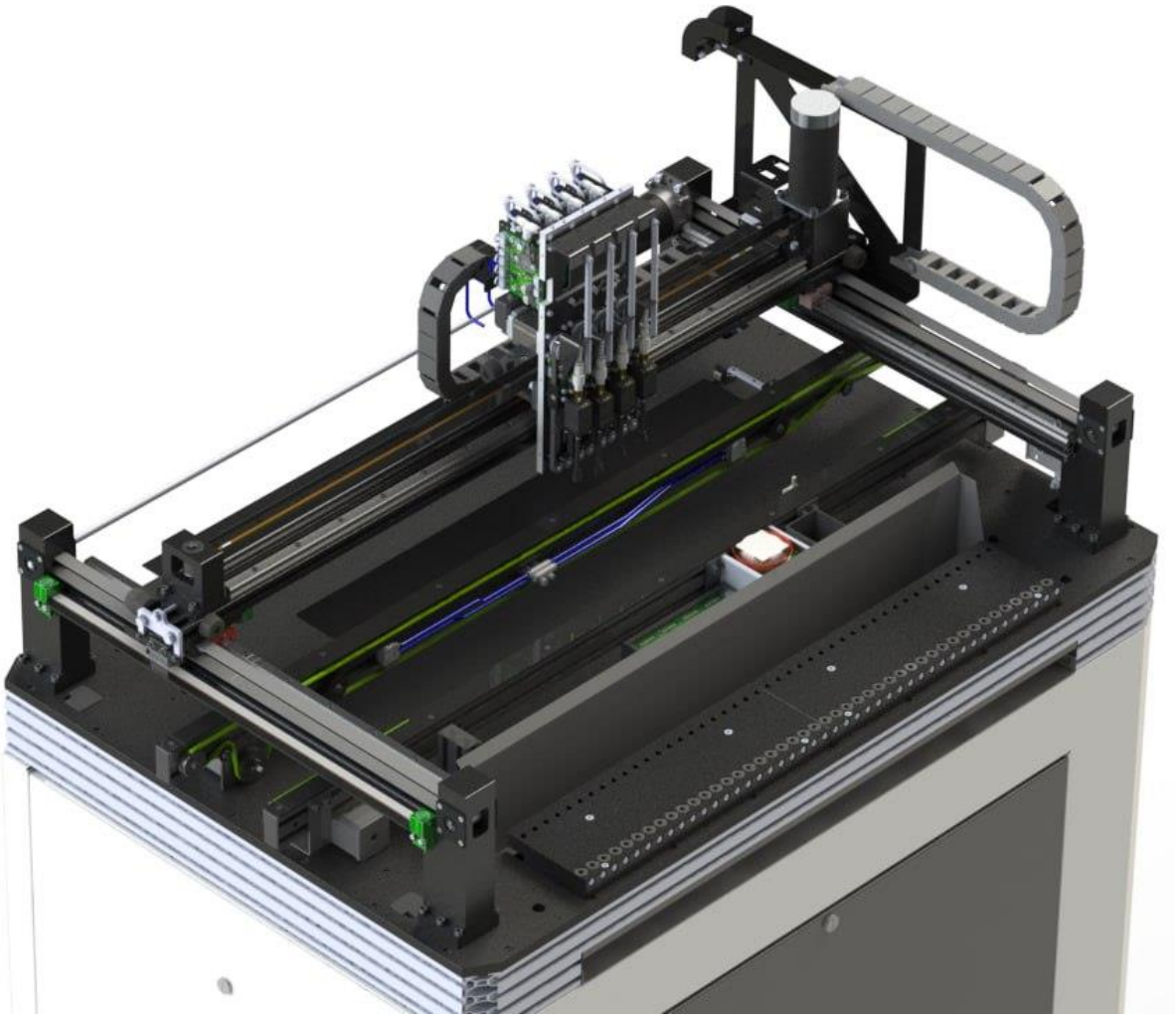

High quality components

We used components of highest quality for all key elements of the **PiPlacer4**:

- Pneumatics: SMC (Japan) and Festo (Germany)
- Guide rails HIWIN (Taiwan)
- Positioning system: Renishaw (United Kingdom)
- Bearings: SKF (Sweden)
- Servo motors and servo drivers: Leadshine (China)
- Power supplies: MEAN WELL (Taiwan)
- Belts from world brands:
  - for axes X, Y from ContiTech AG (Germany)
  - for the Z axis from Gates (United Kingdom)
  - for the conveyor from "Holzer Flexo" (Germany)

Expert Group LLC
tel.: +7 (928) 771-58-81
web: www.eesmt.com, e-mail: info@eesmt.com

Technical parameters

General parameters

Type	stationary
Power supply	200-240V, 50Hz, 800W
Pneumatic supply, consumption	60 normoliters/min
Required compressed air pressure	0.6 — 0.8 MPa
Dimensions	1120 x 750 x 1580 mm
Weight	200 kg
Software	Our own, under Linux OS
Operating temperature range	+18...+25 Degrees Celcius
PC	Motherboard: Gigabyte H610I DDR4 CPU: i5 12400 RAM: 8 GB DDR4 SSD: 256 GB

Installation system

Independent mounting heads with programmable mounting height	4
Number of machine vision cameras	6
Linear setting accuracy	± 35 micron
Angular installation accuracy	± 0,15 deg.
Performance	4000 components per hour with recognition
Single zone conveyor with SMEMA support	955-965 mm from the floor surface to the supporting surface

Boards and components

Maximum Board Length	570 mm
Maximum Board Width	235 mm
Minimum Board Width	50 mm
Maximum Board Thickness	4,7 mm
Minimum Board Thickness	0,3 mm
Component types	SMD (resistors, capacitors), BGA, SOIC, QFT, QFN, QFP
Minimum component size	0201
Maximum component size	40x40 mm
Maximum component height	15 mm

Feeders

Feeders type	pneumatic and electric (Yamaha CI)
Maximum number of 8mm autofeeders	44 pcs
Tape	8, 12, 16, 24, 32, 44, 56, 72, 88 mm (reels 7" and 13")
Matrix	JEDEC-pallets 5,35"x12,44" (136x316 мм) ¼ of the size (up to 4 pcs)
Tape pieces	8, 12, 16, 24, 32, 44 mm (quantity is not limited)
Vibrating feeder for pallets	number of pallets of various widths – up to 18 pcs
Bulk (scattered chips)	the number of areas for bulk elements is not limited

Interfaces

USB 2.0	3 ports
HDMI	1 port
Gigabit Ethernet	1 port
SMEMA	2 ports

Functions

Vacuum control (component pick up)	Yes
Nozzle overpressure function	Yes

PiPlacer4 Standard Package

- 4 independent mounting nozzles
- 6 cameras with computer vision
- Single zone conveyor
- SMEMA interface
- Module for connecting electronic feeders
- Embedded PC based on Intel processor and Linux Ubuntu OS (monitor, keyboard and mouse are not included)
- Two servo motors od X and Y axis (180W and 130W) with linear encoders and two servo drivers (Leadshine)
- Linear guide with lubrication
- Mobility system along the X, Y, Z axes (HIWIN)
- Positioning system: Renishaw (United Kingdom)
- Pneumatics: SMC (Japan) and Festo (Germany)
- Power supplies: MEAN WELL (Taiwan)

- Belts:
- - for axes X, Y from ContiTech AG (Germany)
- - for the Z axis from Gates (United Kingdom)
- - for the conveyor from "Holzer Flexo" (Germany)
- Swivel rollers with support
- Installer status indication (traffic light)
- Illumination of the working area inside the PiPlacer4
- Proprietary PiPlacer software with intelligent error control system, augmented reality technology and control interface in English and Russian language
- 4 nozzles CN040, CN065, CN140, CN220

COST AND TERMS OF DELIVERY

PiPlacer4 standard package: **2,350,000 RUB without VAT**

Delivery: calculated separately

Commissioning: calculated separately

Payment terms:
70% - Advance payment;
30% - Ready for shipment from the Supplier's warehouse;

Delivery terms:
pickup at 347927, Russia, Rostov region, Taganrog, Polyakovskoe schosse, 16-3, ABK-1, off. 408.

Delivery time – calculated individually
Warranty for the supplied equipment - 1 year

Optional

- Automatic nozzle changer – 220000 rubles.

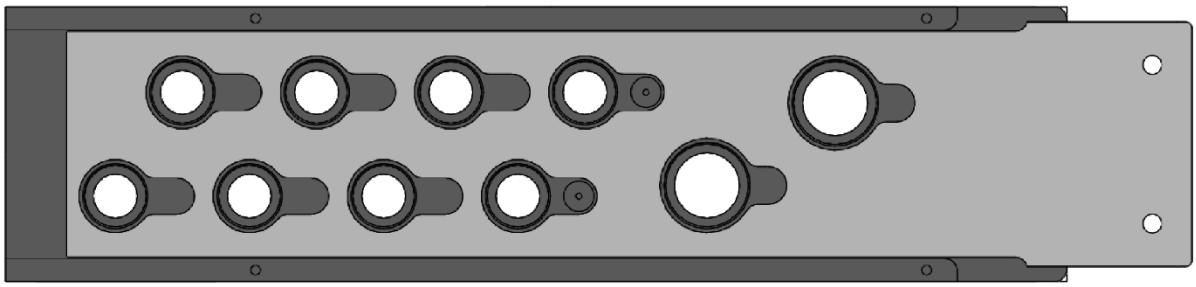

This module allows the placer to change nozzles on its own, without operator interference. This module will speed up the installation process if you need to install 5 or more component sizes on the PCB. Then, for example, the machine can first install all small components on the board at maximum speed. Then it will automatically

change the nozzles and continue to install tall and wide components such as FPGA chips, ADCs and relays.
The module has **8** sections for **small nozzles** and **2** sections **for medium-sized nozzles**.

- Solder Paste Dispenser module – 250000 rubles.
  It is required to apply solder paste to the PCB, you'll need it if you are working with a prototype board, i.e. if you do not have a stencil for applying solder paste with a printer. At the moment, the module is able to apply solder paste to the soldering positions for the 0603 size elements.
  Paste application speed up to 9000 points per hour.
  4 nozzles included: 0.4, 0.6, 0.8, 1 mm.

- Feeder for scattered components + SW – 85000 rubles.
  The kit comes with 7 "tubs" to be installed in Zone #1 behind the far moving conveyor guide, 4 black and 3 white.

Рекомендуется использовать площадку для компонентов №1.
Ширина данной площадки пропорционально уменьшается при ширине печатной платы свыше 175мм.

Использование площадки №2 возможно при ширине печатной платы менее 200мм.

Any number of tubs from the supplied set can be used at the same time, i.e. 1, 2...7 pcs. If not all the supplied tubs are used, the free space can be used for ribbon scraps.

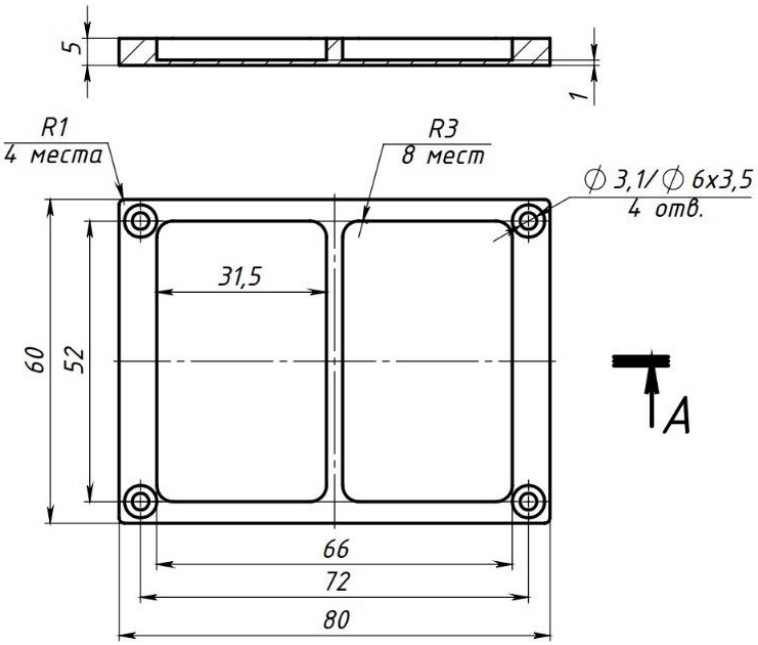

Components of the same size should be placed in each tub. The size of SMD components installed from the tub is from 0603 and higher.
Support for installing 0402 and 0201 components will be implemented later.
Polarity detection of components when installing from a tub will be implemented later.

List of recommended accessories:

№	Part number	Description
1.	CN020	CN020 Vacuum gripper for components 0201
2.	CN030	CN030 Vacuum gripper for components 0201
3.	CN040	CN040 Vacuum gripper for components 0402

4.	CN065	CN065 Vacuum gripper for components 0402, 0603	
5.	CN140	CN140 Vacuum gripper for components 1206, SOT23	
6.	CN220	CN220 Vacuum gripper for components SOP series	
7.	CN400N	CN400 Vacuum gripper for components from 4 up to 12 mm	
8.	CN750	CN750 Vacuum gripper for components more than 12 mm	
9.	CN1100	CN1100 Вакуумный захват. Внеш./внутр. диаметры 12,7/11 мм	

10.	YX01	YX01 Teflon nozzle Led
11.	YX02	YX02 Dome nozzle Led
12.	YX04	YX04 Nozzle for chips 17mm
13.	YX05	YX05 Nozzle for cylindrical diodes
14.	YX06	YX06 Nozzle for domed diodes 35x35
15.	8mm*2mm 0402	Pneumatic feeder 8 mm (step 2 mm, for components 0402)
16.	8mm*4mm	Pneumatic feeder 8 mm (step 4 mm)
17.	12mm*4mm	Pneumatic feeder 12 mm

18.	16mm*4mm	Pneumatic feeder 16 mm
19.	24mm*8mm	Pneumatic feeder 24 mm 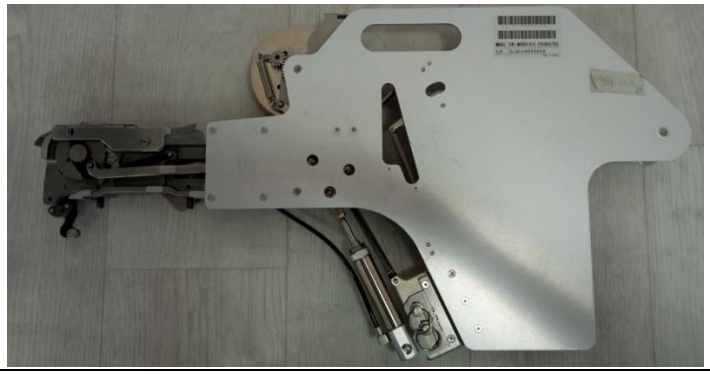
20.	32mm*12mm	Pneumatic feeder 32 mm
21.	44mm*16mm	Pneumatic feeder 44 mm
22.	K1830 EF 8mm	Electric feeder 8 mm 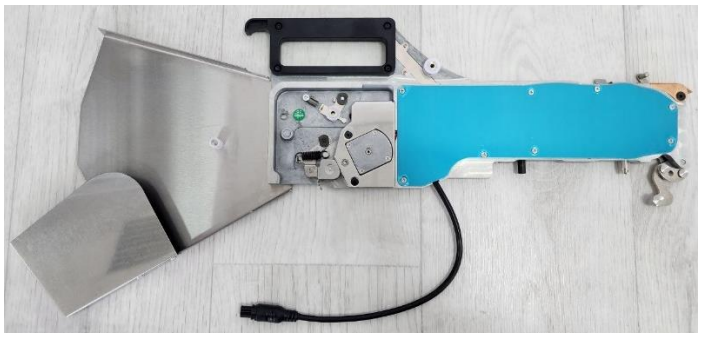 Connector for connection of GX12 (4 contacts), supply voltage 24 V 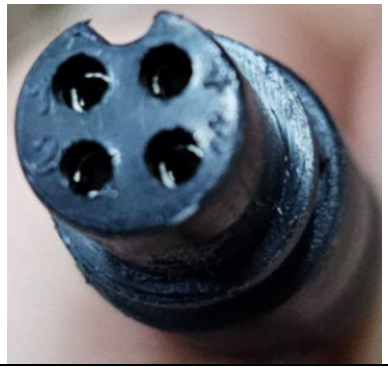 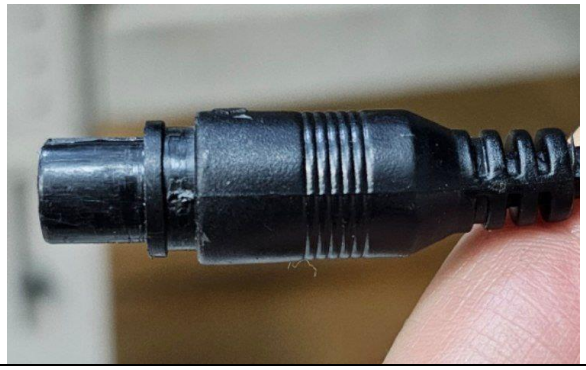
23.	K1830 EF 12mm	Electric feeder 12 mm
24.	K1830 EF 16mm	Electric feeder 16 mm
25.	K1830 EF 24mm	Electric feeder 24 mm
26.	K1830 EF 32mm	Electric feeder 32 mm
27.	K1830 EF 44mm	Electric feeder 44 mm
28.	K1830 EF 56mm	Electric feeder 56 mm
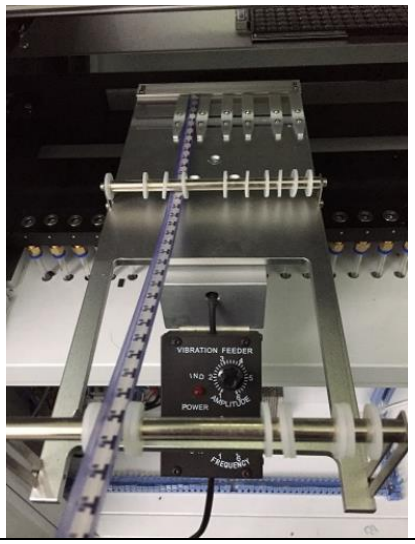
29.	vibrofeeder	Vibrofeeder